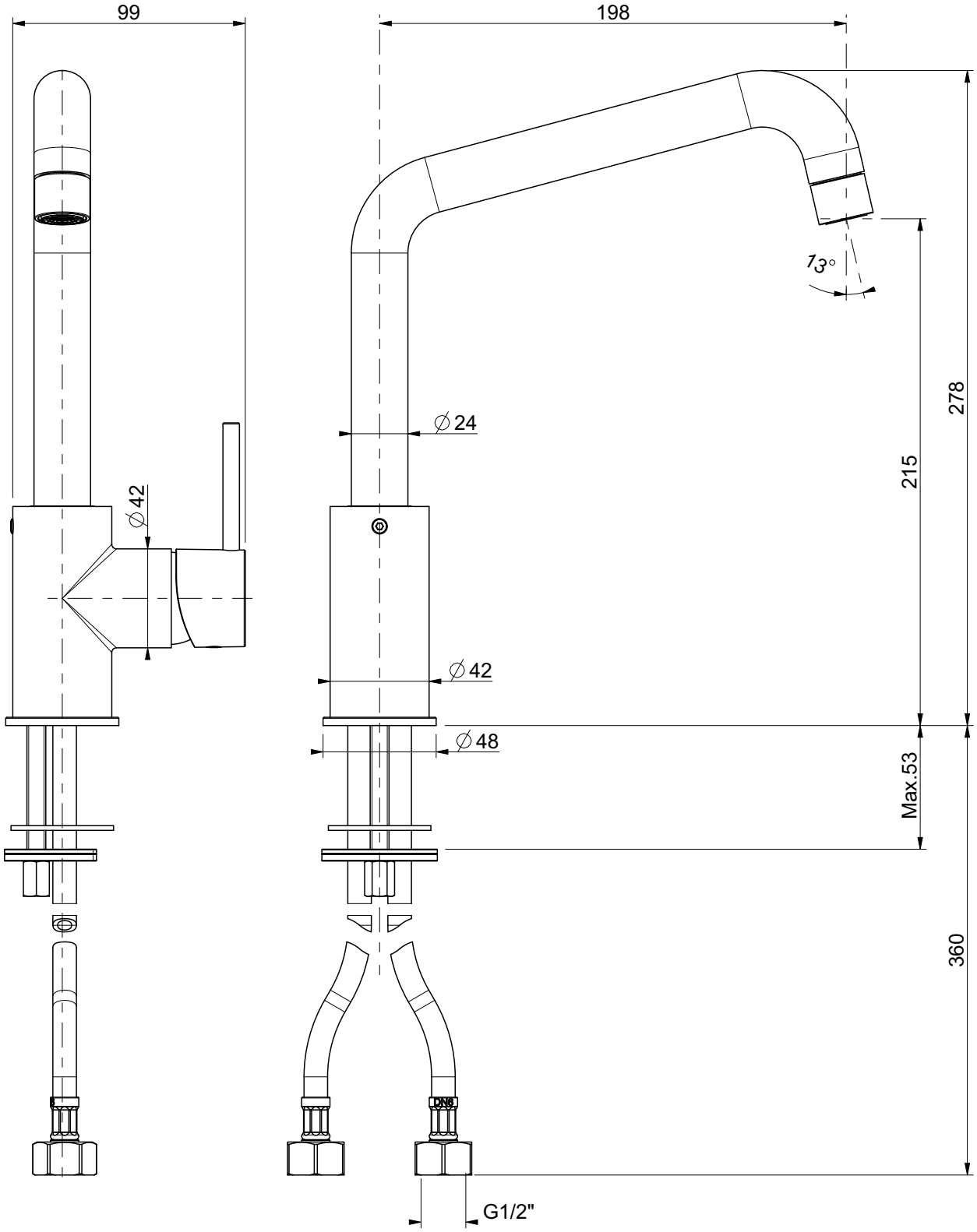
99
198
13°
278
215
∅24
∅42
∅42
∅48
Max.53
360
G1/2"